Catalysis Today 333 (2019) 113–119

Contents lists available at ScienceDirect

Catalysis Today

journal homepage: www.elsevier.com/locate/cattod

α_{II}-$(V_{1-x}W_x)OPO_4$ catalysts for the selective oxidation of *n*-butane to maleic anhydride

C. Schulz[a,1], S.C. Roy[b], K. Wittich[b], R. Naumann d'Alnoncourt[a], S. Linke[a,2], V.E. Strempel[a,2], B. Frank[a,*], R. Glaum[b,*], F. Rosowski[a,c]

[a] BasCat - UniCat BASF JointLab, Technische Universität Berlin, 10623 Berlin, Germany
[b] Institute for Inorganic Chemistry, Rheinische Friedrich-Wilhelms-Universität, 53121 Bonn, Germany
[c] BASF SE, Process Research and Chemical Engineering, 67056 Ludwigshafen, Germany

ARTICLE INFO

Keywords:
Butane
Maleic anhydride
Selective oxidation
VPO
Vanadium phosphorus oxide
Solid solution
Mixed metal phosphate

ABSTRACT

The vanadyl pyrophosphate (VPP) based catalyst is unique in converting *n*-butane selectively (60–70%) into maleic anhydride (MAN), whereas a MAN selectivity of 20% may be regarded as high for structurally different catalyst systems. We present novel vanadium phosphorus oxides and mixed metal phosphate solid solutions tested for *n*-butane oxidation to MAN with a selectivity of > 30%. The majority of the catalysts were prepared by solution combustion synthesis. $(V_{1-x}W_x)OPO_4$ with α_{II} structure was found to be more active and selective in the oxidation of *n*-butane compared to β-$VOPO_4$. By adjusting the tungsten content the oxidation state of vanadium in $(V_{1-x}W_x)OPO_4$ can be tuned between 4.74 and 4.99, which is regarded as a key factor for MAN production. All catalysts were structurally stable, but the specific surface area increased during the reaction, as detected by X-ray diffraction and N_2 physisorption, respectively. $(V_{1-x}Mo_x)OPO_4$ was also stable, but the MAN selectivity was lower compared to β-$VOPO_4$. Low conversions result from the low surface area of the screening samples, however, could be overcome by advanced synthesis protocols.

1. Introduction

The catalytic oxidation of *n*-butane to maleic anhydride (MAN) is the first and so far only industrial process of selective alkane oxidation and has an annual world capacity of more than 1 million tons [1]. Although the molar yield of the industrial process has been steadily improved over the past decades, the yields are still below 65%, which is mainly limited by product selectivity [1–9]. The industrial state of the art catalyst is based on crystalline $(V^{IV}O)_2P_2O_7$ (vanadyl(IV) pyrophosphate, VPP). Due to several vanadium(V) orthophosphate by-phases, which are formed under reaction conditions, the catalyst is often referred to as vanadium phosphorus oxide (VPO). Significant improvements in activity and (by-)product selectivity with this catalyst system were achieved by increasing the specific surface area and by adding promotors like Nb [10], Co [11], Fe [12], and Sm [13]. Extensive research on VPP-based systems missed a significant breakthrough within the past decades. Thus, a new perspective on this reaction is expected from the search for new materials rather than improving the existing VPO system. The scientific literature on materials selectively converting *n*-butane to MAN is dominated by VPO [14–21]. The reports can be subdivided into a) vanadyl(IV) pyrophosphate and b) vanadyl(V) orthophosphate with different structure types as α_I-$VOPO_4$, α_{II}-$VOPO_4$, β-$VOPO_4$, γ-$VOPO_4$, and δ-$VOPO_4$ [22]. All of them are well discussed with regard to their catalytic performance in *n*-butane oxidation as a by-phase in VPO [23–27].

Less effort was put into the synthesis and catalytic testing of single phase bulk $VOPO_4$ catalysts. First results published by Shimoda *et al.* showed that single phase α_{II}-$VOPO_4$ and β-$VOPO_4$ can produce MAN from *n*-butane. Starting from $(NH_4)_2((VO)_2C_2O_4(HPO_4)_2)\cdot 5H_2O$ or NH_4HVPO_6 single phase α_{II}-$VOPO_4$ and β-$VOPO_4$ were synthesized. MAN selectivities ranged from 14% to 20% [23]. Under reaction conditions most phases are stable and no indication for by-phases were found by *in situ* Raman studies [27].

In our project novel materials with structural motifs similar to those of $VOPO_4$ and VPP were searched. The crystal structure of VPP consists of a chain-ladder-motif of edge- and corner-sharing VO_6-octahedra, which are connected to pyrophosphate anions. Similar motifs are present in α_{II}-$VOPO_4$. Here, the vanadium oxygen polyhedra are only

* Corresponding authors.
E-mail addresses: b.frank@bascat.tu-berlin.de (B. Frank), rglaum@uni-bonn.de (R. Glaum).
[1] Present address: hte GmbH, the high throughput experimentation company, 69123 Heidelberg, Germany.
[2] Present address: BASF SE, Process Research and Chemical Engineering, 67056 Ludwigshafen, Germany.

https://doi.org/10.1016/j.cattod.2018.05.040
Received 19 March 2018; Accepted 21 May 2018
Available online 26 May 2018
0920-5861/ © 2018 Elsevier B.V. All rights reserved.

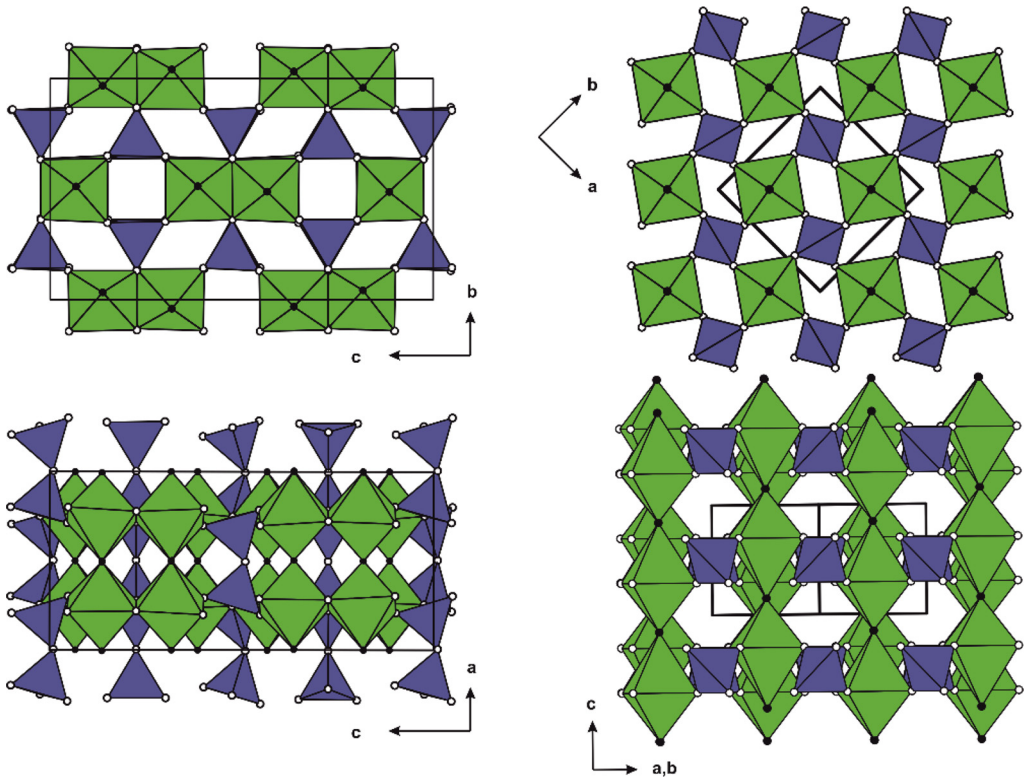

Fig. 1. Crystal structures of VPP (left) and α_{II}-$VOPO_4$ (right) with VO_6 units (green) and PO_4 units (blue) [28,29]. Oxygen atoms from phosphate groups are given as ○, vanadyl oxygen atoms as ●.

connected by vertices. Pyrophosphate groups are replaced by orthophosphate anions (Fig. 1).

Recently, Roy *et al.* reported a new class of V^{IV}/V^{V} containing mixed metal vanadium tungsten phosphate solid solutions. Solution combustion synthesis [30,31] starting from vanadium and tungsten precursors in nitric acid yields solid solutions $V_{1-x}W_xOPO_4$ ($0.04 \leq x \leq 0.26$), which crystallize with α_{II}-$VOPO_4$ and β-$VOPO_4$ structure ($0 \leq x \leq 0.01$), respectively [29]. XPS studies showed that the substitution of V^{V} by V^{IV}/W^{VI} in the α_{II}-$VOPO_4$ lattice sensitively affects the average oxidation state of V, which can be finely adjusted between nominal values of 4.74–4.96 (α_{II}-$VOPO_4$-type) and 4.99–5.00 (β-$VOPO_4$-type). NAP XPS showed that V^{IV} and V^{V} are present with an average oxidation state of 4.3 on the surface of VPO [32]. The presence of V^{V} on the surface is crucial as it can be correlated with MAN production [33]. Therefore, the introduction of bulk catalysts with a tunable vanadium oxidation state is a promising approach.

In the present study, triggered by this finding, further mixed metal (V, W, Mo, Fe) oxide phosphates in various oxidation states were synthesized and tested for their performance in the selective oxidation of *n*-butane. In particular, the substitution of V by Mo is of interest as Mo is a frequent constituent of many catalysts for hydrocarbon (amm)oxidation [34,35].

2. Experimental

2.1. Catalyst preparation

Single phase solid solutions $(V_{1-x}W_x)OPO_4$ (α_{II}- and β-$VOPO_4$-type), $(V_{1-x}Mo_x)OPO_4$ (β- and γ-$VOPO_4$-type), $W_{0.67}Fe_{0.33}OPO_4$ ($WOPO_4$-type), $Fe(WO_2)_2(P_2O_7)(PO_4)$, and "$(V_{0.95}Mo_{0.05})_2P_2O_7$" were obtained by solid state synthesis or the solution combustion technique [29,36,37]. Single phase VPP was obtained by reducing β-$VOPO_4$ in Ar ($p(O_2) = 10^{-5}$ mbar) at 750 °C for 2 days. Polycrystalline $WOPO_4$ was synthesized from $W_2P_2O_{10}$, WO_3, and P_4 in sealed silica tubes at 1000 °C for 7 days [38]. The reference catalyst VPO was synthesized according to patent literature [12] *via* the organic synthesis route using *iso*-butanol. Finally, the reduction of β-$VOPO_4$ in H_2, which was saturated with H_2O in a bubbler at ambient temperature ($p_{sat}(H_2O) = 0.023$ bar), at 500 °C for 1 day yields the thermodynamically metastable phase VPO_4-m1, which is structurally related to β-$VOPO_4$ [37].

The fine powders of the original catalyst samples were pelletized in a lab press (2.5 min, pressure equivalent to a weight of 2 t on a 12 mm tablet), respectively. Afterwards the pellets were crushed in an agate mortar and a 100–200 µm particle size fraction was obtained using analytical sieves made of stainless steel. The estimation of the Weisz-Prater criterion as well as previous pre-tests with more active catalysts indicate that this sieve fraction is appropriate to exclude mass and heat transfer limitations under the reaction conditions chosen.

2.2. Catalyst characterization

Routine XRPD analyses (IP-Guinier technique [39]) were performed for phase identification and purity control. The patterns were recorded at ambient temperature using an image plate Guinier camera (HUBER G670, Cu-$K_{\alpha 1}$ radiation, $\lambda = 154.059$ pm) with integrated read-out system [40]. The finely ground powder samples were spread on Mylar foil (Fluxana GmbH & Co. KG, type TF-160). Powder patterns were recorded for 15 min in the range of $4° \leq 2\theta \leq 100°$. The cell parameters were determined with the software SOS [41], α-SiO_2 (p. A., Merck) was used as an internal standard. Scherrer diameters (D) were calculated according to Eq. (1) with a Scherrer constant (K) of 0.94 for ω (FWHM) of spherical crystals with cubic symmetry. ω was corrected for instrumental broadening with Y_2O_3 standard.

$$D = \frac{K\lambda}{\omega\cos\theta} \tag{1}$$

BET measurements were carried out in a volumetric N_2

Table 1
Catalyst characterization by XRPD and BET measurements and surface before catalytic testing.

Catalyst	$S_{BET,fresh}$ (m^2/g)	Structure Type[a]	Space Group	Scherrer Diameter (nm)
$VOPO_4$	3.5	β	*Pnma*	> 200
$V_{0.99}W_{0.01}OPO_4$	1.3	β	*Pnma*	103
$V_{0.94}W_{0.06}OPO_4$	2.4	α_{II}	*P4/n*	> 200
$V_{0.9}W_{0.1}OPO_4$	4.9	α_{II}	*P4/n*	165
$V_{0.8}W_{0.2}OPO_4$	3.4	α_{II}	*P4/n*	84
$WOPO_4$	3.9	$WOPO_4$	$P2_1/m$	78
$V_{0.8}Mo_{0.2}OPO_4$	0.8	β	*Pnma*	52
$V_{0.8}Mo_{0.2}OPO_4$	1.1	γ	*Pbam*	192
$W_{0.67}Fe_{0.33}OPO_4$	6.2	$WOPO_4$	$P2_1/m$	68
VPO_4-m1	6	VPO_4	C2/c	53
$(VO)_2P_2O_7$[b]	8.0	VPP	$Pca2_1$	31
$(VO)_2P_2O_7$[c]	1.4	VPP	$Pca2_1$	> 200
$(V_{0.95}Mo_{0.05}O)_2P_2O_7$	1.5	VPP	$Pca2_1$	> 200
$Fe(WO_2)_2(P_2O_7)(PO_4)$	3	VPO_4	C2/c	> 200

[a]Greek letters refer to the various polymorphs of $VOPO_4$; [b]from organic synthesis route; [c]from SCS.

physisorption setup (Autosorb-6-B, Quantachrome) at the temperature of liquid N_2. The sample was degassed in a dynamic vacuum at 423 K for 2 h prior to physisorption. Full adsorption-desorption isotherms were recorded. The specific surface area according to the BET method was calculated from the linear range of the adsorption isotherm (p/p_0 = 0.05–0.3). All catalysts were characterized before and after catalytic testing (Table 1).

2.3. Catalyst test setup

Catalytic tests were performed in a fully automated, commercial 8-channel parallel testing setup (hte GmbH, Fig. 2). It consists of a gas dosing unit, a reactor unit, and an analytical unit. The gas dosing unit provides mixed feeds comprising N_2, O_2 (0–25 %), *n*-butane (0–10 %), Ar (as an internal standard), and H_2O (0–60 %). The typical range of gas hourly space velocities (GHSV) is 500–5000 h^{-1}. The test unit consists of 8 reactors for catalyst samples and one blank reactor filled with inert material (calcined corundum, 400–700 µm, CeramTec). Catalyst volumes of 1 mL were placed inside stainless steel reactors with inner diameters of 10 mm. Stainless steel thermowells (OD = 1/8") are placed in the center of all reactors, which are used to guide thermocouples into the catalyst beds. The reactor temperature can be individually controlled in the range of 250–550 °C. The product gases are analyzed by two gas chromatographs (GC 7890 A, Agilent). The effluent gas of the blank reactor, which corresponds to the inlet gas of all reactors, is also analyzed. Prior to the GC analysis, all effluent gas streams are diluted with hot inert gas to avoid the condensation of organic products or steam. Transfer lines between reactors and gas chromatographs are heated (200 °C). The GCs are optimized for the analysis of the product spectrum of the oxidation of *n*-butane to MAN.

The conversion (X) of *n*-butane (Eqs. (2) and (4)) and the selectivities (S) of the respective products are calculated from the concentrations measured with reference to the internal standard Ar (Eqs. (3) and (5)). The latter are averaged over 5 runs measured at each temperature step, respectively. The selectivities of the (by)products were normalized to the number of carbon atoms (N_c) in the (by)products and *n*-butane, respectively. Depending on the catalyst, byproducts comprise butenes, acrylic acid, propionic acid, acetic acid, acrolein, acetaldehyde, propane, propene, acetylene, ethylene, ethane, carbon monoxide, and carbon dioxide. There are no unidentified peaks in the gas chromatograms. At low levels of *n*-butane conversion, the product-based analysis of selectivities and conversions (Eqs. (4) and (5)) is preferred.

$$X = 1 - \frac{c_{n-\text{butane}}}{c_{n-\text{butane},0}} \times \frac{c_{Ar,0}}{c_{Ar}} \tag{2}$$

$$S_i = \frac{c_i \times c_{Ar,0}}{c_{\text{butane},0} \times c_{Ar} - c_{\text{butane}} \times c_{Ar,0}} \times \frac{N_{c,i}}{4} \tag{3}$$

$$X = 1 - \frac{c_{n-\text{butane}}}{\sum c_{n-\text{butane}} + c_{products}} \times \frac{c_{Ar,0}}{c_{Ar}} \tag{4}$$

$$S_i = \frac{c_i \times c_{Ar,0}}{\sum (c_{n-\text{butane}} + c_{\text{products}}) \times c_{Ar} - c_{\text{butane}} \times c_{Ar,0}} \times \frac{N_{c,i}}{4} \tag{5}$$

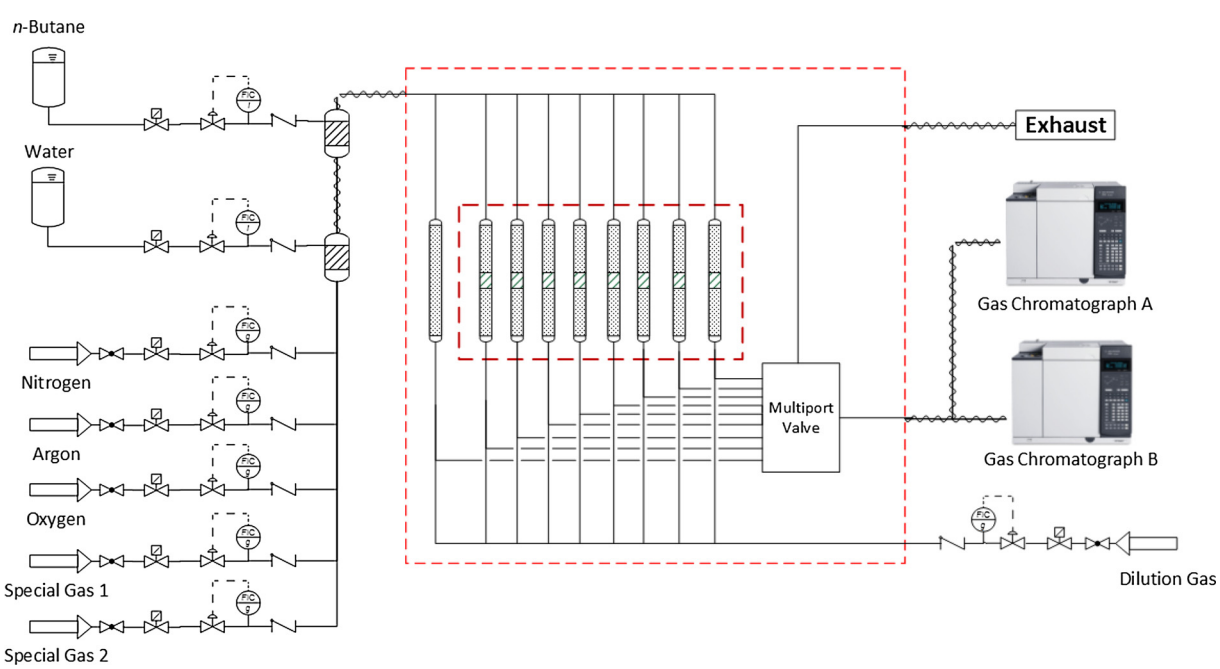

Fig. 2. Flow scheme of the laboratory scale test setup with 8 parallel fixed-bed reactors and 1 blank reactor, gas and liquid dosing unit, and on-line GC for product analysis.

2.4. Catalytic testing

All catalysts were tested in groups of 8 samples following the same testing protocol. Catalyst volumes of 1 mL were kept in their position in the reactor tubes by two layers of inert corundum particles, respectively. The GHSV was fixed at 2000 h^{-1} (approx. 2000 ml g^{-1} h^{-1}). The catalysts were ramped at 2 K min^{-1} in a lean air mix of 5% O_2/N_2 to 250 °C. At 250 °C the feed gas was changed to 2% *n*-butane, 20% O_2, 3% H_2O, 3% Ar with N_2 balance and subsequently the reactor temperature was further increased to 375 °C. After an initial equilibration period of 30 min the catalytic measurements were started. The standard testing procedure includes 5 GC analyses per reactor and temperature with the reactor temperature ramping up in 25 K steps up to a maximum temperature of 450 °C, followed by ramping down to 400 °C. Finally, the reactors were cooled down to ambient temperature in 5% O_2/N_2. Thus, information on activity, selectivity, and thermal stability/deactivation of the catalysts is obtained. One testing cycle takes 8 days including the (dis)charging and cleaning of the reactors.

3. Results and discussion

According to crystal structure and chemical composition of the catalysts, the results of characterization and catalytic testing are collected in two categories:

3.1. Vanadium phosphorus oxides

The group of vanadium phosphorus oxides investigated in our study comprises vanadium(III) orthophosphate VPO_4-m1 and vanadyl(IV) pyrophosphate $(VO)_2P_2O_7$. VPO_4-m1 is a new polymorph of VPO_4 and a promising model catalyst with V in the low oxidation state III and absence of vanadyl oxygen atoms. The latter, however, are often discussed as crucial functional groups for the activation of *n*-butane [3,42]. XRPD analysis of the as-prepared sample clearly identifies "single phase" VPO_4-m1 (Fig. 3). VPO_4-m1 and its structure are part of ongoing investigations and not clarified to its full extend. Therefore, it is unclear if the additional reflections in the XRPD pattern indicate a superstructure or an adphase. The main reflections of its XRPD pattern are assigned on the basis of the β-$VOPO_4$ structure (*Pnma*, with $z = 4$, lattice parameters $a = 7.7863(5)$ Å, $b = 6.1329(3)$ Å, $c = 6.9673(5)$ Å). Under reaction conditions VPO_4-m1 is oxidized to $(VO)_2P_2O_7$ and β-$VOPO_4$. This oxidation is accompanied by a more than two-fold increase of the specific surface area (Table 2). In parallel, the conversion of *n*-butane as well as the MAN selectivity steadily increase during the reaction. Likely the significant boost of activity can be correlated to both the increased surface area and the formation of highly active $(VO)_2P_2O_7$ and β-$VOPO_4$ phases, respectively. This is confirmed by the final performance matching the reference VPO from solution combustion synthesis with regard to the MAN selectivity (Table 2).

In principle $(VO)_2P_2O_7$ can be synthesized *via* two different routes [43–49]. In the aqueous route V_2O_5 is reduced by NH_2OH in the presence of H_3PO_4 yielding highly crystalline $(VO)_2P_2O_7$ after calcination of the $VOHPO_4{\cdot}0.5H_2O$ precursor [44,48–52]. Instead, the organic route uses *iso*-butanol as the reducing agent [44,53,54]. Here, V_2O_5, H_3PO_4, and *iso*-butanol are refluxed for several hours and converted to $VOHPO_4{\cdot}0.5H_2O$, which similarly forms $(VO)_2P_2O_7$ in the calcination process. However, the crystallinity of the "organic" material is significantly lower as shown by XRPD measurements, and typically leads to a higher surface area enhancing catalyst performance [44]. Single-phase $(VO)_2P_2O_7$ with a high crystallinity can also be synthesized by the reduction of β-$VOPO_4$ in Ar at 750 °C, as done in the present study. The MAN selectivity obtained over this material is lower compared to the industrial reference system VPO from the organic route (Table 2). However, it is in the same range as VPO catalysts synthesized *via* the water route with a P:V ratio of 1:1 [55].

For $(VO)_2P_2O_7$ the effect of Mo doping was tested. The sample with 5% of V substituted by Mo $(V_{0.95}Mo_{0.05}O)_2P_2O_7$ was prepared by solution combustion synthesis (SCS). The influence on crystallinity and specific surface area is negligible (Table 2). However, in terms of catalyst performance the surface area-corrected conversion of *n*-butane is similar as compared to the undoped material, whereas the MAN selectivity is reduced to 30%. The loss of selectivity is mainly related to

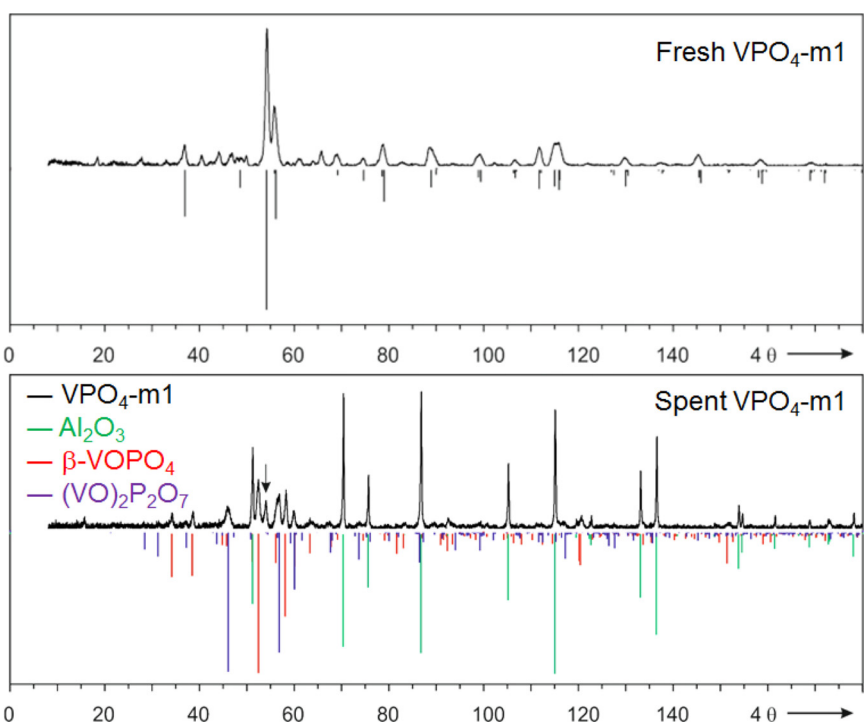

Fig. 3. Guinier photographs of VPO_4-m1 before (top) and after catalytic testing (bottom). Reflections of Al_2O_3 assigned to corundum, which was used as inert material.

Table 2
Catalyst performance data, stability, specific surface before and after catalytic testing.

Catalyst	X(*n*-butane)[f] (%)	S(MAN)[f] (%)	S(CO_x) (%)	$S_{BET,fresh}$(m^2/g)	$S_{BET,used}$(m^2/g)	Structure Stability
VPO_4-m1[a]	6	21	72	1.9	–	–
VPO_4-m1[b]	14	49	54	–	4.7	No[c]
$(VO)_2P_2O_7$[d]	80	70	29	26	26	Yes
$(VO)_2P_2O_7$[e]	14	43	45	2.1	1.8	Yes
$(V_{0.95}Mo_{0.05}O)_2P_2O_7$	15	30	34	1.5	1.3	Yes
$Fe(WO_2)_2(P_2O_7)(PO_4)$	3	0	68	1.1	0.8	Yes

[a]TOS = 254 h; [b]TOS = 480 h; [c]Formation of $(VO)_2P_2O_7$ and β-$VOPO_4$; [d]from organic synthesis route; [e]material from SCS; [f]at 400 °C.

formation of acrylic (S(acrylic acid) = 17%) and acetic acids (S(acetic acid) = 10%). The formation of CO_x is also reduced, which indicates on the one hand inhibition of total oxidation of *n*-butane or MAN by Mo. On the other hand Mo enhances C-C cleavage of reaction intermediates. Since the amount of Mo is small and the results match the undoped material quite well it cannot be ruled out that Mo is not incorporated at all.

3.2. Mixed metal phosphate solid solutions

The most extensively investigated sub-category within this class is based on the substitution of V by W according to the formula ($V_{1-x}W_xOPO_4$) [29]. XRPD patterns of these materials indicate single phases (β for $x \leq 0.01$, α_{II} for $0.04 \leq x \leq 0.26$) with a mean crystallite size in the range of 37 ($x = 0.2$) to 54 nm ($x = 0.06$). These phases are stable and neither phase transformation nor formation of an adphase was observed after the catalytic testing (Fig. 4).

The BET surface area of the as-prepared samples, which is generally very low in the range of 1–4 m^2/g, occasionally changed during the catalytic process (Table 3). An almost doubled specific surface area as well as activation is observed for the tungsten-rich $V_{0.8}W_{0.2}OPO_4$. On the one hand our results could indicate a dramatic reconstruction of the morphologies of particle and surface during the catalytic process. On the other hand pores might be blocked by residual organic compounds from the synthesis. Calcination of all samples at higher temperatures compared to reaction temperatures should be sufficient for carbon removal from synthesis. However, the effect on surface area is small. With decreasing W content within these solid solution-type catalysts the effect of reaction conditions on the specific surface area is reduced, which is almost absent on $V_{0.99}W_{0.01}OPO_4$ and even negative (reduction of S_{BET}) for the tungsten-free $VOPO_4$ catalyst. Instead, the industrial reference VPO, owing to elaborated synthesis protocols, has an approximately 10-fold higher and stable specific surface area of 26 m^2 g^{-1}, which is retained after the catalytic test.

Catalytic tests of samples of compositions $V_{1-x}W_xOPO_4$ show a MAN selectivity in the range of 20–31% (Fig. 5). XPS studies showed that W^V is oxidized to W^{VI} in $V_{1-x}W_xOPO_4$ reducing an equimolar amount of V^V to V^{IV} [29]. The comparison of $V_{0.8}W_{0.2}OPO_4$ and $VOPO_4$ clearly shows an increased MAN selectivity, which might be attributed to the reduced (average) oxidation state of vanadium [29]. The apparent activation energy can be correlated with the tungsten content or the amount of V^{IV}. Isotope labeling studies of *n*-butane showed that C-H activation of methylene groups is the rate determining step and the activation is correlated with the presence of V^V [6]. By substitution of vanadium by tungsten, the oxidation state of vanadium is reduced, which could explain the higher activation energy. Nevertheless, a direct correlation between substituted V and MAN selectivity is hardly possible. Our results indicate a maximum selectivity near 20% substitution of V by W ($V_{1-x}W_xOPO_4$ with $x = 0.2$). On the other hand, vanadium-free $WOPO_4$ does not convert *n*-butane to MAN, which underlines that W does not play an active role in the catalytic cycle. The change in surface area on the course of the reaction, which is observed for several samples, is typically accompanied by a corresponding change in activity, whereas

Table 3
Catalyst stability, specific surface before and after catalytic testing, and activation energy.

	Structure Type[a]	$S_{BET,fresh}$ (m^2/g)	$S_{BET,used}$ (m^2/g)	Structure Stability	E_a[b] (kJ/mol)
$VOPO_4$	β	3.5	2.6	Yes	74
$V_{0.99}W_{0.01}OPO_4$	β	1.3	1.2	Yes	93
$V_{0.94}W_{0.06}OPO_4$	α_{II}	2.4	3.9	Yes	93
$V_{0.9}W_{0.1}OPO_4$	α_{II}	4.9	6.5	Yes	108
$V_{0.8}W_{0.2}OPO_4$	α_{II}	3.4	6.3	Yes	115
$WOPO_4$	$WOPO_4$	3.9	5.5	No[c]	24
$V_{0.8}Mo_{0.2}OPO_4$	β	0.8	0.5	Yes	98
$V_{0.8}Mo_{0.2}OPO_4$	γ	1.1	1.3	Yes	111
$W_{0.67}Fe_{0.33}OPO_4$	$WOPO_4$	6.2	6.1	No[d]	n.a.

[a]Greek letters refer to the various polymorphs of $VOPO_4$; [b]Apparent activation energies derived from Arrhenius plots; [c]By-phase related to MPTB. [d]After catalytic testing one additional reflection appears.

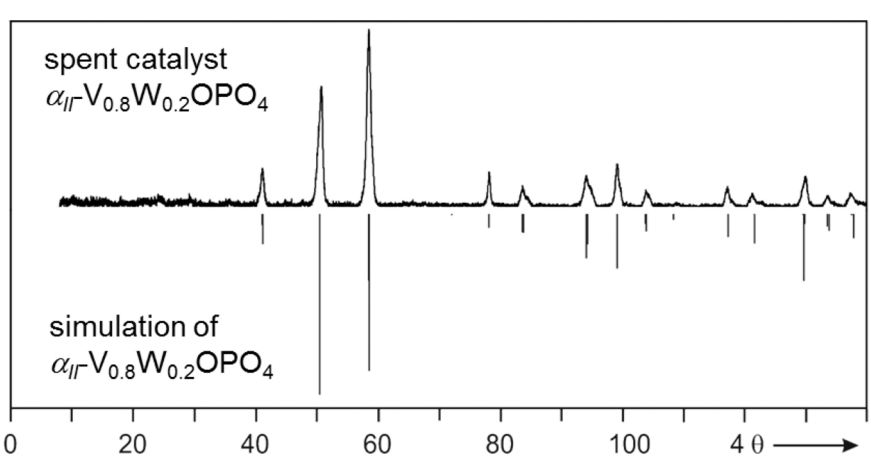

Fig. 4. Guinier photograph of single phase $V_{0.8}W_{0.2}OPO_4$ after catalytic testing and simulated XRPD pattern of $V_{0.8}W_{0.2}OPO_4$ [37].

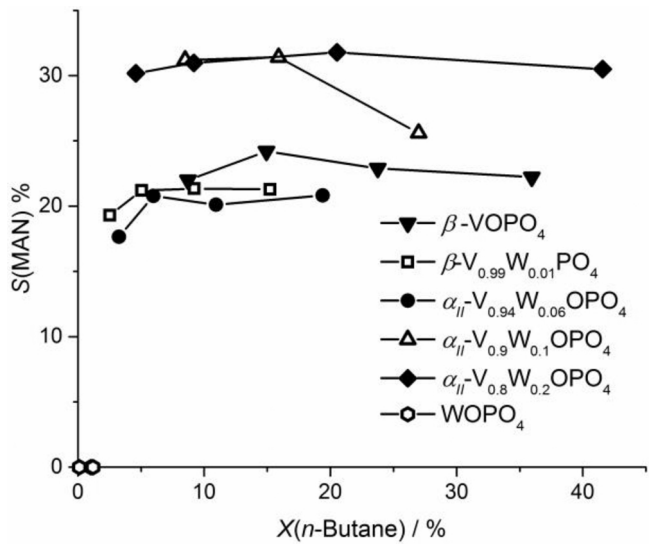

Fig. 5. MAN selectivity as a function of *n*-butane conversion.

MAN selectivity remains constant. Notably, the activity of most of these catalysts if referred to the specific surface area is comparable or even higher than for the reference VPO. For instance, the most selective $V_{0.8}W_{0.2}OPO_4$ provides a conversion and specific surface area (after reaction) of 42% and 3.4 $m^2\,g^{-1}$, however, 80% of *n*-butane conversion over VPP can be considered mainly as a result of the superior surface area (26 $m^2\,g^{-1}$) [12]. Thus, a high potential for improvement of these catalysts is expected from the optimization of synthetic strategies.

The main by-products are CO_x. The organic by-products of *n*-butane oxidation over $V_{1-x}W_xOPO_4$-type materials comprise acrylic and acetic acids (< 8%), as well as traces of 1-butene, ethylene, furan, and propene (< 1%).

Molybdenum is a common constituent of selective oxidation catalysts, such as MoVTeNb mixed oxides for ammoxidation of propane to acrylonitrile, oxidation of propane to acrylic acid, or oxidative dehydrogenation of ethane to ethylene [56–60]. Thus, Mo was in our focus for the substitution of V in $VOPO_4$. We tested the γ- and the *β*-phase with 20% substitution ($V_{0.8}Mo_{0.2}OPO_4$), respectively (Fig. 6) [61].

Neither phase changes, decomposition nor significant changes in specific surface area were observed after exposure to reaction

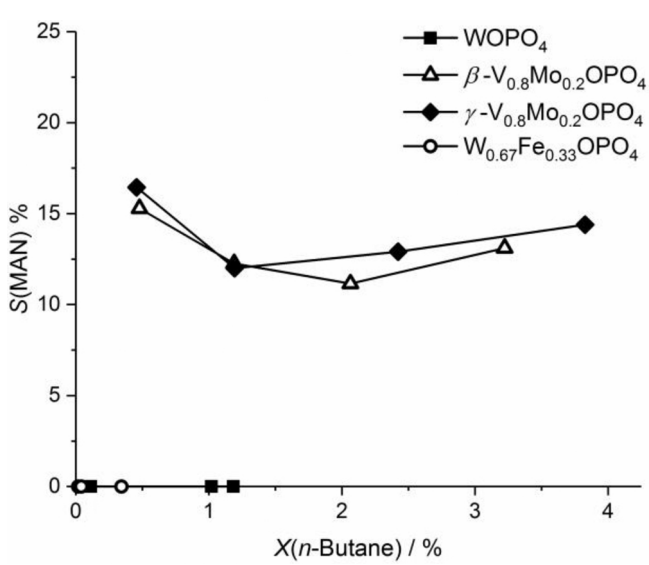

Fig. 6. MAN selectivity as a function of *n*-butane conversion at GHSV = 2000 h^{-1} and $c(C_4)/c(O_2)/c(H_2O)$ = 2%/20%/3%.

conditions (Table 2). However, the catalysts were nearly inactive, which might be explained by the very low surface area and/or by a negative effect of Mo. Compared to the mixed-metal phosphates $V_{1-x}W_xOPO_4$, the MAN selectivity drops significantly. Similar to $(V_{0.95}Mo_{0.05}O)_2P_2O_7$ the selectivities of acetic and acrylic acids are enhanced whereas CO and CO_2 formation is reduced. The surface-corrected net activity is also much lower than for the W-substituted vanadyl phosphates. However, the level of MAN selectivity of the mixed-metal phosphates $V_{1-x}W_xOPO_4$ and *β*-$VOPO_4$ is in good agreement with single phase *α*-$VOPO_4$ and *β*-$VOPO_4$ catalysts as shown by Shimoda [23]. Finally, we tested the substitution of W^V by $(Fe^{III}_{1/3}W^{VI}_{2/3})$ in $WOPO_4$ ($W_{1-x}Fe_xOPO_4$ with $x = 0.33$). This sample, which was obtained by SCS, provides a relatively high specific surface area of 6.2 $m^2\,g^{-1}$ but is unstable under reaction conditions. This instability under the testing conditions is rather surprising since zero activity for *n*-butane activation indicates little interaction with the gas phase. Although Fe [62] and W [63] are known as efficient promotors for selective oxidation catalysts, this is further indication for the active role of V in the activation of *n*-butane as stated by Centi *et al.* [3]

4. Conclusion

A variety of catalysts were synthesized and tested for selective oxidation of *n*-butane based on $(VO)_2P_2O_7$ and $VOPO_4$. Vanadium was substituted or replaced by other transition metals like tungsten, molybdenum, or iron. Substitution of V by W leads to $V_{1-x}W_xOPO_4$ with α_{II} structure type, which is a novel class of catalysts for selective oxidation of *n*-butane to MAN. The amount of tungsten can be tuned in the range from $0.04 \le x \le 0.26$. All catalysts are phase stable under reaction conditions, although the specific surface area increases during the reaction, which needs to be studied in detail. Reducing the oxidation state of vanadium increase the apparent activation energy for *n*-butane conversion. Compared to *β*-$VOPO_4$, the MAN selectivity could be increased from 20% up to 31%. Nevertheless, $V_{1-x}W_xOPO_4$ catalysts are less selective and active than VPO reference. However, it could be shown that the oxidation state of vanadium influences the MAN selectivity. Substitution of V with Mo in $(VO)_2P_2O_7$ and $VOPO_4$ showed different results. In $VOPO_4$, V by Mo can be easily substituted leading to pure *β*- and γ-phases, which are more stable under reaction conditions compared to $V_{1-x}W_xOPO_4$. In case of $(V_{0.95}Mo_{0.05}O)_2P_2O_7$ there is no evidence in the XRPD that Mo is incorporated in the $(VO)_2P_2O_7$ crystal structure. In both cases, the effect on catalysis is comparable. MAN selectivity is reduced compared to the non-substituted catalysts. Further, addition of Mo strongly influences the C-C cleavage leading to the formation products like acetic and acrylic acids. Additionally, we could show that vanadyl pyrophosphate synthesized by solution combustion synthesis is similar to VPO from aqueous routes. Differences in activity can be explained by a low surface area. The reduced MAN selectivity might be correlated with a 1:1 ratio of P:V since an excess of phosphorus enhances the selectivity. VPO_4-m1 is a new polymorph of VPO, which was introduced by removing the vanadyl oxygen atoms of *β*-$VOPO_4$. Under reaction conditions it is oxidized to $(VO)_2P_2O_7$ and *β*-$VOPO_4$. The performance is comparable to VPO by SCS and stresses the importance of stable catalysts as well as the inflexibility of $(VO)_2P_2O_7$. Complete substitution of V in $(VO)_2P_2O_7$ and $VOPO_4$ with iron or tungsten yields phase-stable materials that are not active in the selective oxidation of *n*-butane. In general, the combination of vanadium in the oxidation state VI and V and the ratio of vanadium and phosphate are crucial parameters for selective oxidation of *n*-butane to MAN. Although, VPO is the best catalyst known, it has limited options for optimization due to the inflexible crystal structure and limited effect of promotors [62]. Therefore, mixed transition metal $V_xM_{1-x}OPO_4$ might be a good starting point for novel catalysts with higher potential for improvement. It could be shown that solid state synthesis methods like solution combustion synthesis might be a good way to access mentioned new materials/structure motifs for catalysis. However, surface area is

quite low. Consequently, other synthesis methods like hydrothermal routes should be considered as well as supporting of the active catalyst. Transition metals should be selected based on their catalytic performance in oxidation catalysis or by their potential for reduction of vanadium since recent NAP XPS studies of VPO showed that under working conditions the average oxidation state of surface vanadium is +4.3 [32].

From a mechanistic point of view, kinetics and reaction networks of the newly found mixed-metal phosphates $V_{1-x}W_xOPO_4$ will be analyzed and compared to VPO as well as β-$VOPO_4$, which could be a crucial step towards understanding the active site. Especially, the surface composition and oxidation state under reaction conditions needs to be analyzed in detail.

References

[1] N. Ballarini, F. Cavani, C. Cortelli, S. Ligi, F. Pierelli, F. Trifirò, C. Fumagalli, G. Mazzoni, T. Monti, Top. Catal. 38 (2006) 147–156.
[2] F. Trifirò, R.K. Grasselli, Top. Catal. 57 (2014) 1188–1195.
[3] G. Centi, Catal. Today 16 (1993) 5–26.
[4] C.H. Bartholomew, R.J. Farrauto, Fundamentals of Industrial Catalytic Processes, John Wiley & Sons, Inc, Hoboken, NJ, USA, 2005.
[5] J.-C. Volta, Comptes Rendus de l'Académie des Sciences - Series IIC - Chemistry 3, (2000), pp. 717–723.
[6] G. Centi, F. Trifiro, J.R. Ebner, V.M. Franchetti, Chem. Rev. 88 (1988) 55–80.
[7] M.A. Pepera, J.L. Callahan, M.J. Desmond, E.C. Milberger, P.R. Blum, N.J. Bremer, J. Am. Chem. Soc. 107 (1985) 4883–4892.
[8] R. Glaum, C. Welker-Nieuwoudt, C.-K. Dobner, M. Eichelbaum, F. Gruchow, C. Heine, A. Karpov, R. Kniep, F. Rosowski, R. Schlögl, S.A. Schunk, S. Titlbach, A. Trunschke, Chem. Ing. Tech. 84 (2012) 1766–1779.
[9] M.-J. Cheng, W.A. Goddard, J. Am. Chem. Soc. 135 (2013) 4600–4603.
[10] F. Ghelfi, G. Mazzoni, C. Fumagalli, F. Cavani, F. Pierelli, EP Patent (2004) EP1663482 (A1).
[11] V.A. Zazhigalov, J. Haber, J. Stoch, A.I. Pyatnitzkaya, G.A. Komashko, V.M. Belousov, Appl. Catal. A: Gen. 96 (1993) 135–150.
[12] C. Dobner, M. Duda, A. Raichle, H. Wilmer, F. Rosowski, M. Hölzle, Katalysator und Verfahren zur Herstellung von Maleinsäureanhydrid, Patent Application (2006), EP1915210 (A1).
[13] H.-Y. Wu, H.-B. Wang, X.-H. Liu, J.-H. Li, M.-H. Yang, C.-J. Huang, W.-Z. Weng, H.-L. Wan, Appl. Surf. Sci. 351 (2015) 243–249.
[14] H.-Y. Wu, P. Jin, Y.-f. Sun, M.-H. Yang, C.-J. Huang, W.-Z. Weng, H.-L. Wan, J. Mol. Catal. A: Chem. 414 (2016) 1–8.
[15] B. Jordan, C. Calvo, Can. J. Chem. 51 (1973) 2621–2625.
[16] B.D. Jordan, C. Calvo, Acta Crystallogr. B Struct. Crystallogr. Cryst. Chem. 32 (1976) 2899–2900.
[17] R. Gopal, C. Calvo, J. Solid State Chem. 5 (1972) 432–435.
[18] D. Ballutaud, E. Bordes, P. Courtine, Mater. Res. Bull. 17 (1982) 519–526.
[19] M. Tachez, F. Theobald, E. Bordes, J. Solid State Chem. 40 (1981) 280–283.
[20] G. Ladwig, Z. Anorg. Allg. Chem. 338 (1965) 266–278.
[21] R.N. Bhargava, R.A. Condrate, Appl. Spectrosc. 31 (1977) 230–236.
[22] E. Bordes, Catal. Today 1 (1987) 499–526.
[23] T. Shimoda, T. Okuhara, M. Misono, Bull. Chem. Soc. Jpn. 58 (1985) 2163–2171.
[24] Z.-Y. Xue, G.L. Schrader, J. Phys. Chem. B 103 (1999) 9459–9467.
[25] M. Abon, J. Catal. 156 (1995) 28–36.
[26] V.V. Guliants, J.B. Benziger, S. Sundaresan, I.E. Wachs, J.-M. Jehng, J.E. Roberts, Catal. Today 28 (1996) 275–295.
[27] F. Benabdelouahab, J. Catal. 134 (1992) 151–167.
[28] S. Geupel, K. Pilz, S. van Smaalen, F. Büllesfeld, A. Prokofiev, W. Assmus, Acta Crystallogr. C Cryst. Struct. Commun. 58 (2002) i9–i13.
[29] S.C. Roy, R. Glaum, D. Abdullin, O. Schiemann, N. Quang Bac, K.-H. Lii, Z. Anorg. Allg. Chem. 640 (2014) 1876–1885.
[30] M.S. Hegde, G. Madras, K.C. Patil, Acc. Chem. Res. 42 (2009) 704–712.
[31] A. Varma, A.S. Mukasyan, A.S. Rogachev, K.V. Manukyan, Chem. Rev. 116 (2016) 14493–14586.
[32] C. Heine, M. Hävecker, E. Stotz, F. Rosowski, A. Knop-Gericke, A. Trunschke, M. Eichelbaum, R. Schlögl, J. Phys. Chem. C 118 (2014) 20405–20412.
[33] G.W. Coulston, Science 275 (1997) 191–193.
[34] E. Mannei, F. Ayari, C. Petitto, E. Asedegbega–Nieto, A.R. Guerrero–Ruiz, G. Delahay, M. Mhamdi, A. Ghorbel, Microporous Mesoporous Mater. 241 (2017) 246–257.
[35] K. Amakawa, Y.V. Kolen'ko, A. Villa, M.E. Schuster, L.-I. Csepei, G. Weinberg, S. Wrabetz, R. Naumann d'Alnoncourt, F. Girgsdies, L. Prati, R. Schlögl, A. Trunschke, ACS Catal. 3 (2013) 1103–1113.
[36] S.C. Roy, B. Raguž, W. Assenmacher, R. Glaum, Solid State Sci. 49 (2015) 18–28.
[37] S.C. Roy, Thermodynamically Stable and Metastable Solids: New Approaches to the Synthesis of Anhydrous Phosphates Containing Vanadium, Molybdenum, and/or Tungsten. PhD Thesis, Bonn, (2015).
[38] S.L. Wang, C.C. Wang, K.H. Lii, J. Solid State Chem. 82 (1989) 298–302.
[39] S. Fischer, H. Fischer, S. Diele, G. Pelzl, K. Jankowski, R.R. Schmidt, V. Vill, Liq. Cryst. 17 (1994) 855–861.
[40] I. Tanaka, M. Yao, M. Suzuki, K. Hikichi, T. Matsumoto, M. Kozasa, C. Katayama, J. Appl. Crystallogr. 23 (1990) 334–339.
[41] G. Meyer, SOS. Staatsexamenarbeit, Gießen, (1980).
[42] 11th International congress on catalysis - 40th anniversary, Proceedings of the 11th ICC, (1996) Elsevier.
[43] J.W. Johnson, D.C. Johnston, A.J. Jacobson, J.F. Brody, J. Am. Chem. Soc. 106 (1984) 8123–8128.
[44] G. Busca, J. Catal. 99 (1986) 400–414.
[45] H.E. Bergna, Method of Making Maleic Anhydride, US Patent (1988), US 4769477.
[46] E. Bordes, Catal. Today 16 (1993) 27–38.
[47] H. Morishige, J. Tamaki, N. Miura, N. Yamazoe, Chem. Lett. 19 (1990) 1513–1516.
[48] E.A. Lombardo, C.A. Sánchez, L.M. Cornaglia, Catal. Today 15 (1992) 407–418.
[49] G. Poli, I. Resta, O. Ruggeri, F. Trifirò, Appl. Catal. 1 (1981) 395–404.
[50] G.J. Hutchings, M.T. Sananes, S. Sajip, C.J. Kiely, A. Burrows, I.J. Ellison, J.C. Volta, Catal. Today 33 (1997) 161–171.
[51] L.M. Cornaglia, C.A. Sánchez, E.A. Lombardo, Appl. Catal. A: Gen. 95 (1993) 117–130.
[52] N. Batis, J. Catal. 128 (1991) 248–263.
[53] F. Cavani, G. Centi, F. Trifiro, Appl. Catal. 9 (1984) 191–202.
[54] M. O'Connor, F. Dason, B.K. Hodnett, Appl. Catal. 64 (1990) 161–171.
[55] R.I. Bergman, N.W. Frisch, Production of maleic anhydride by oxidation of *n*-butane, US Patent (1966), US3293268A.
[56] A. Celaya Sanfiz, T. Hansen, A. Sakthivel, A. Trunschke, R. Schlögl, A. Knoester, H. Brongersma, M. Looi, S. Hamid, J. Catal. 258 (2008) 35–43.
[57] R. Naumann d'Alnoncourt, Y.V. Kolen'ko, R. Schlögl, A. Trunschke, Comb. Chem. High Throughput Screen. 15 (2012) 161–169.
[58] A. Celaya Sanfiz, T.W. Hansen, D. Teschner, P. Schnörch, F. Girgsdies, A. Trunschke, R. Schlögl, M.H. Looi, S.B.A. Hamid, J. Phys. Chem. C 114 (2010) 1912–1921.
[59] J.S. Valente, R. Quintana-Solórzano, H. Armendáriz-Herrera, G. Barragán-Rodríguez, J.M. López-Nieto, Ind. Eng. Chem. Res. 53 (2014) 1775–1786.
[60] R.K. Grasselli, J.D. Burrington, D.J. Buttrey, P. DeSanto Jr, C.G. Lugmair, A.F. Volpe Jr, T. Weingand, Top. Catal. 23 (2003) 5–22.
[61] A. Raminosona, E. Bordes, P. Courtine, J. Solid State Chem. 68 (1987) 1–10.
[62] G.J. Hutchings, R. Higgins, J. Catal. 162 (1996) 153–168.
[63] B.Y. Jo, S.S. Kum, S.H. Moon, Appl. Catal. A: Gen. 378 (2010) 76–82.